指示灯区域
DC24V供电输入端子
RS485通讯端子
以太网端口

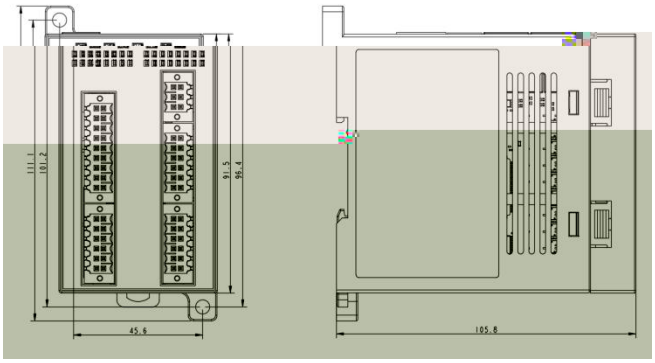
111.1
101.2
91.5
86.4
45.6
105.8

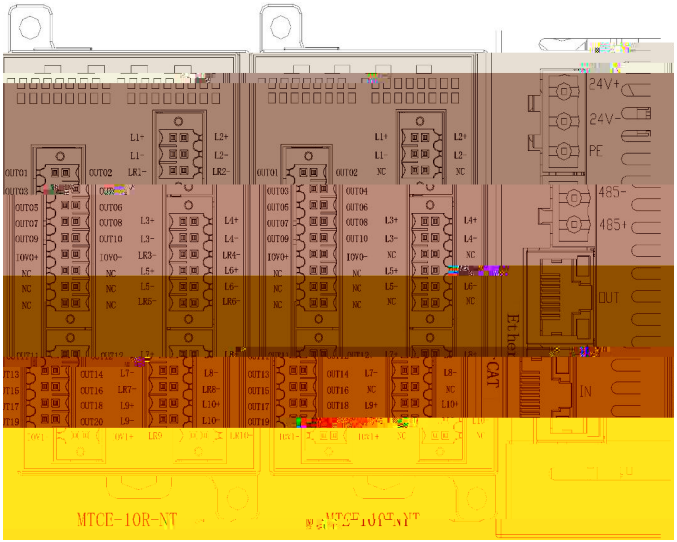
24V+
24V-
PE
485-
485+
OUT
IN
EtherCAT
MTCE-10R-NT

⏚	

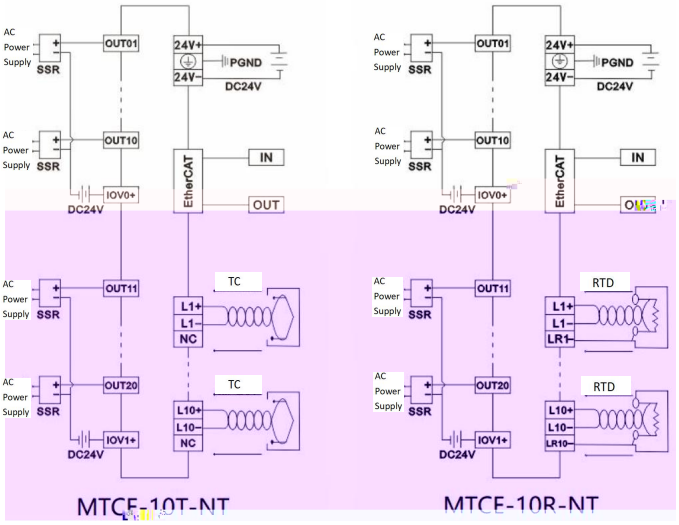
AC Power Supply
SSR
OUT01
OUT10
OUT11
OUT20
IOV0+
IOV1+
DC24V
24V+
24V-
PGND
EtherCAT
IN
OUT
TC
RTD
L1+
L1-
NC
L10+
L10-
LR1-
LR10-
MTCE-10T-NT
MTCE-10R-NT

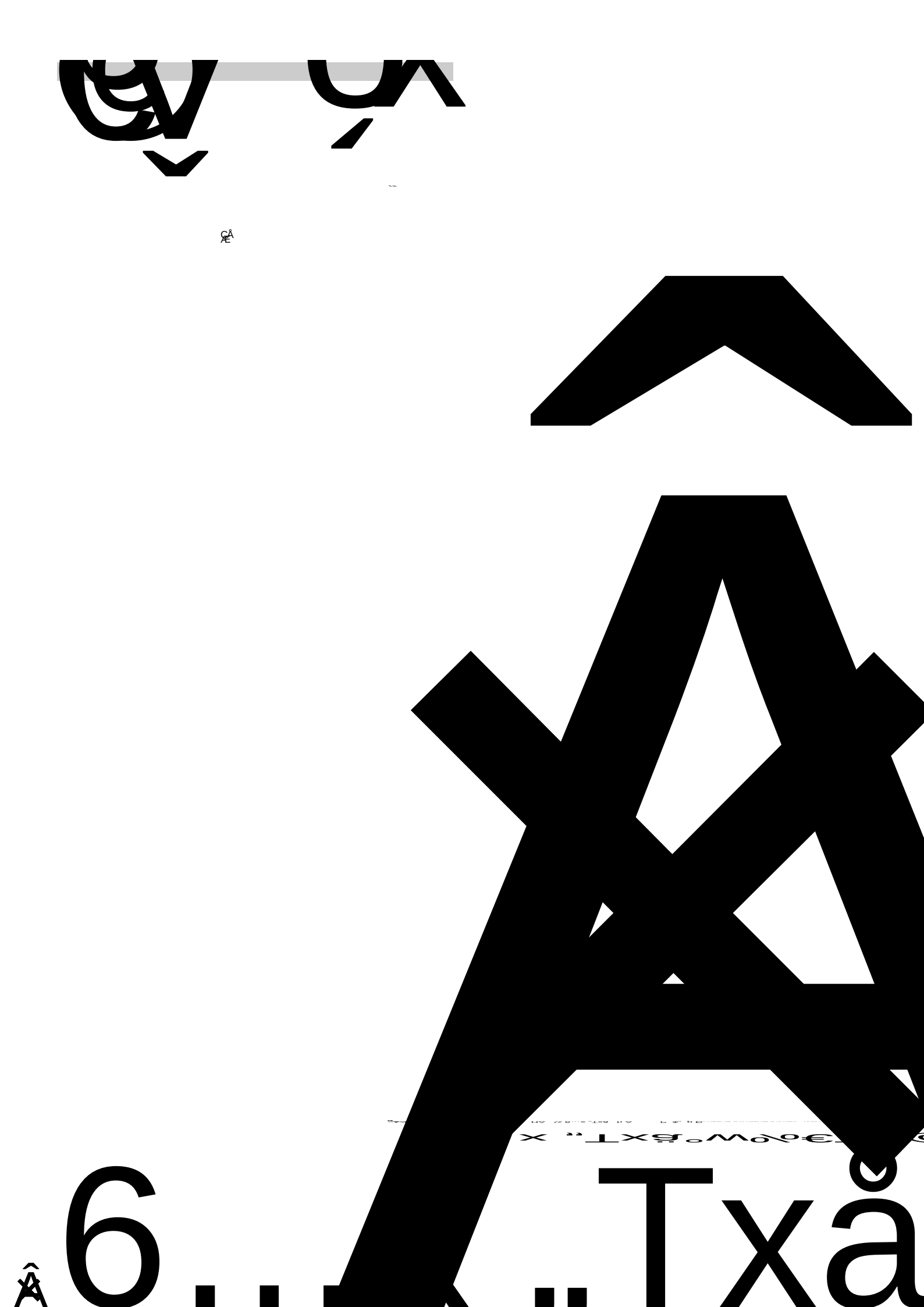

[redacted]